WIRING SCHEME

Mirrors Atina (LI4 ZS) with IR sensor and heating foil

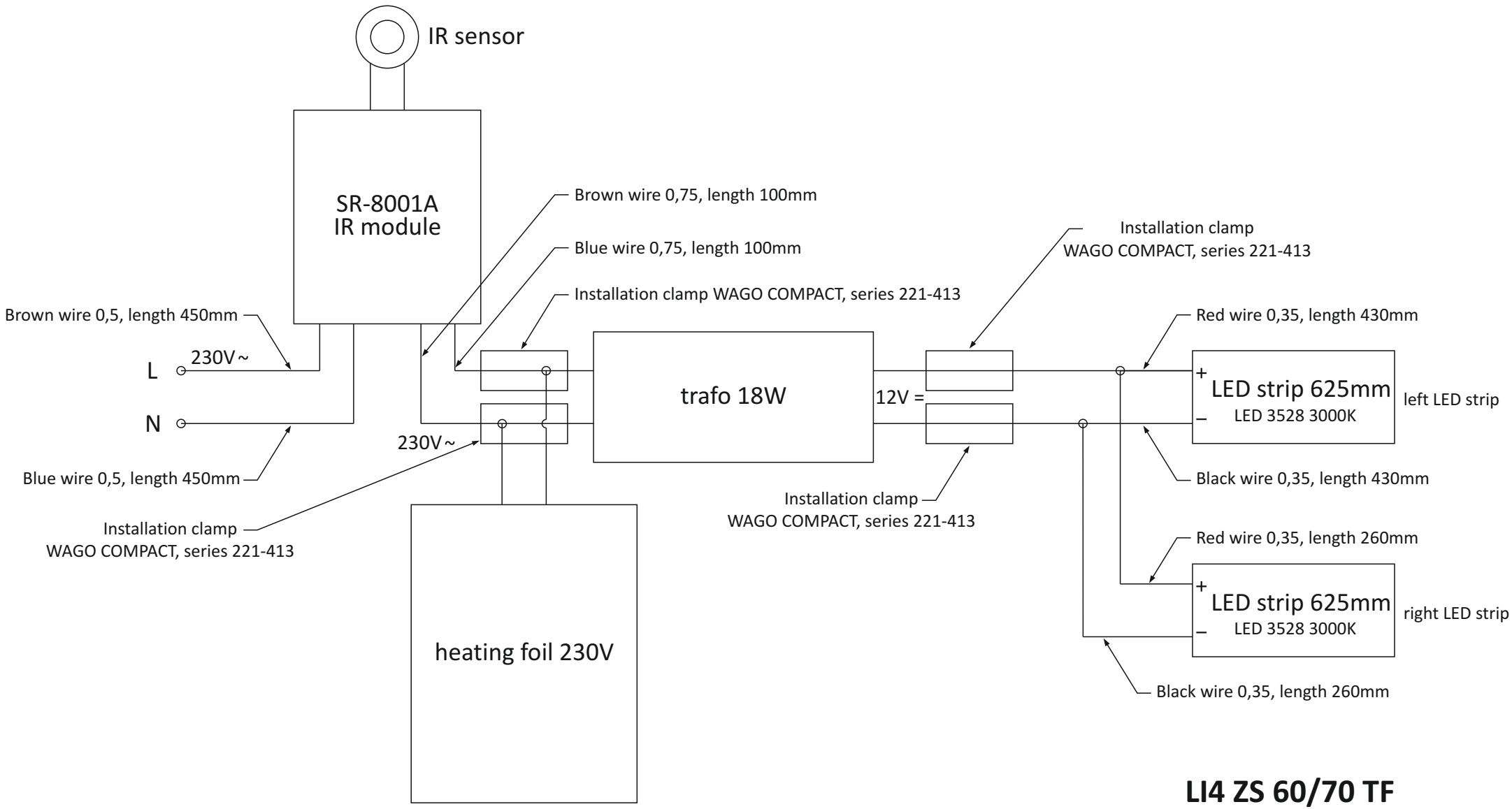

LI4 ZS 60/70 TF