RAPID SLX

Made in Germany

99.1258.031/ÄM 244080/05.19

www.grohe.com

Pure Freude an Wasser

GROHE

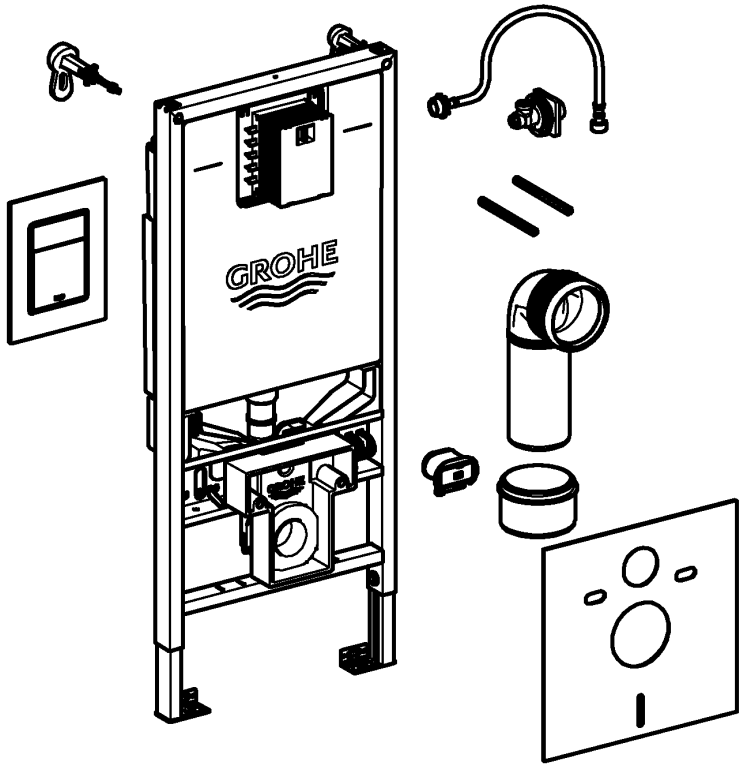

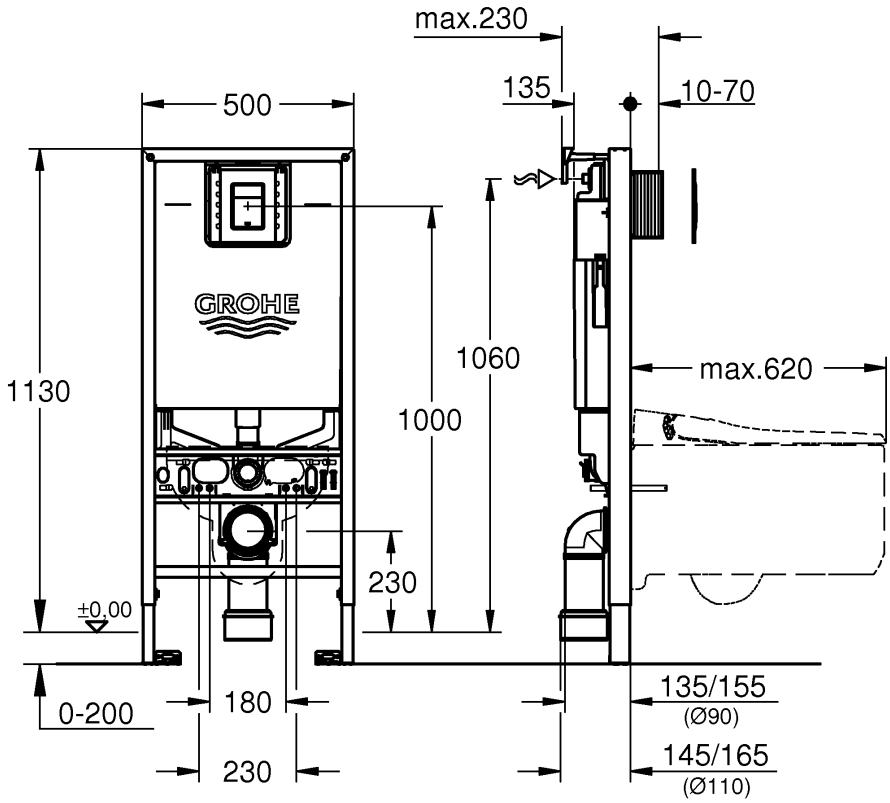

Source NOBB, 3/5/2025

2 - 4

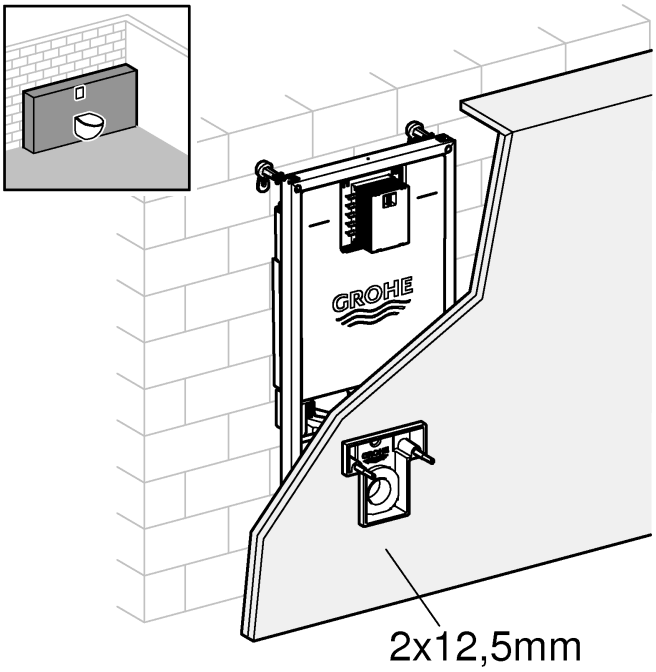

5 - 6

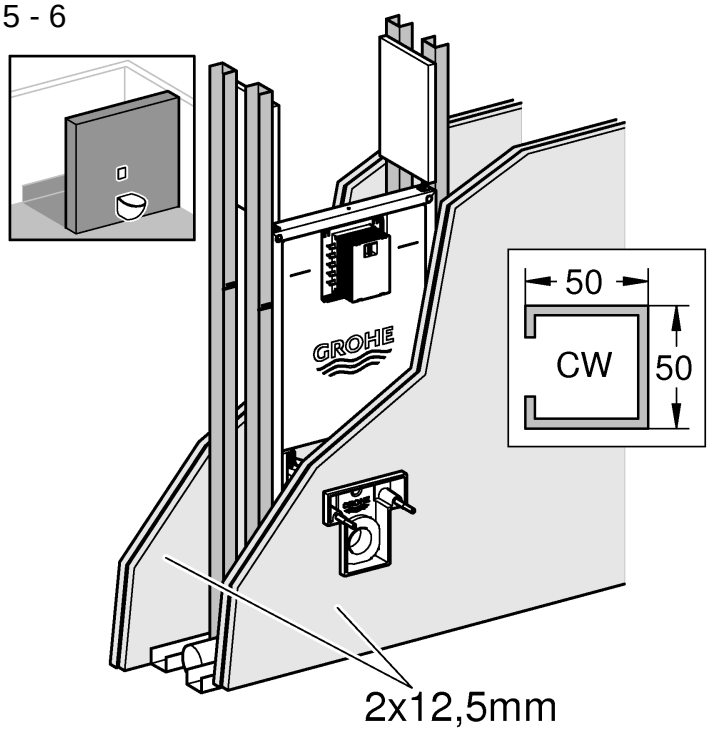

2 - 4

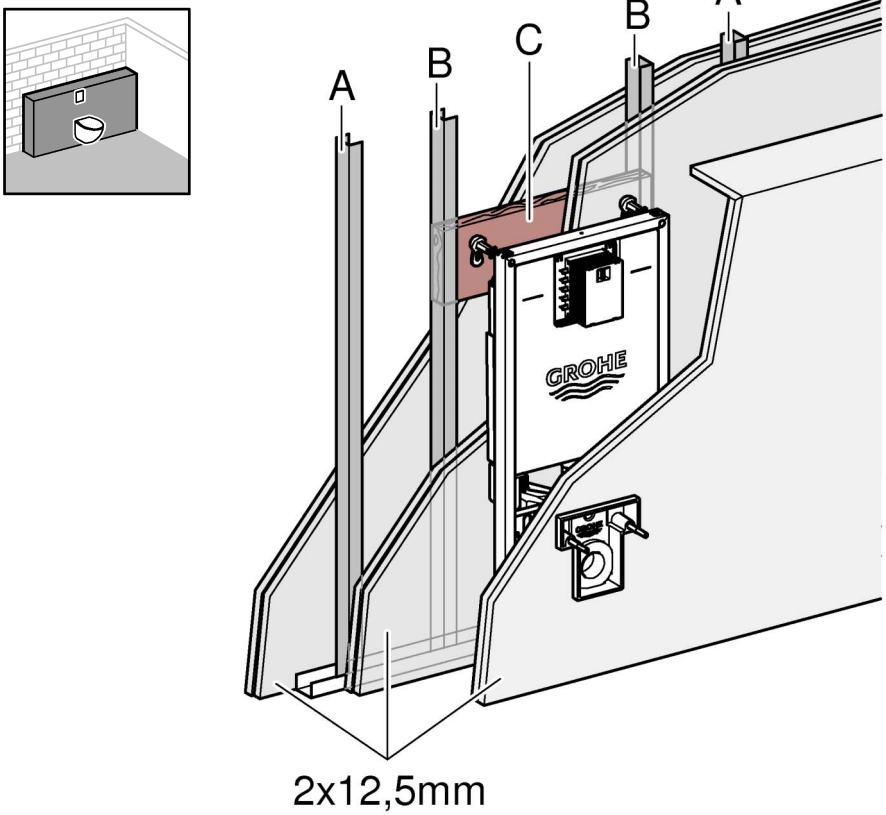

A	B	C
CW	UA	
50x50x0,6	50x40x2	300x620x24
75x50x0,6	75x40x2	

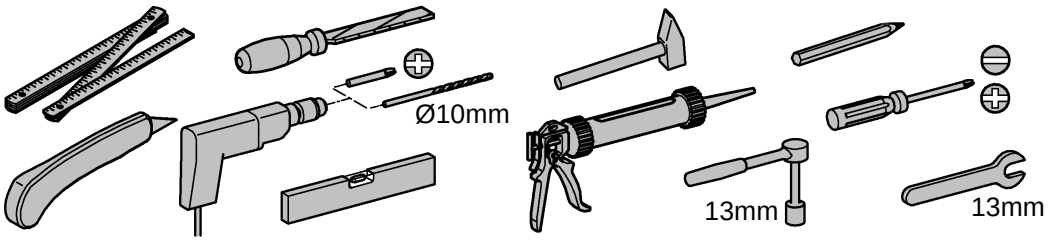

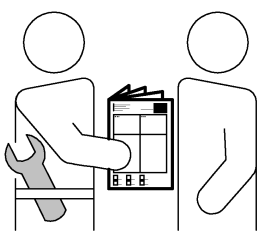

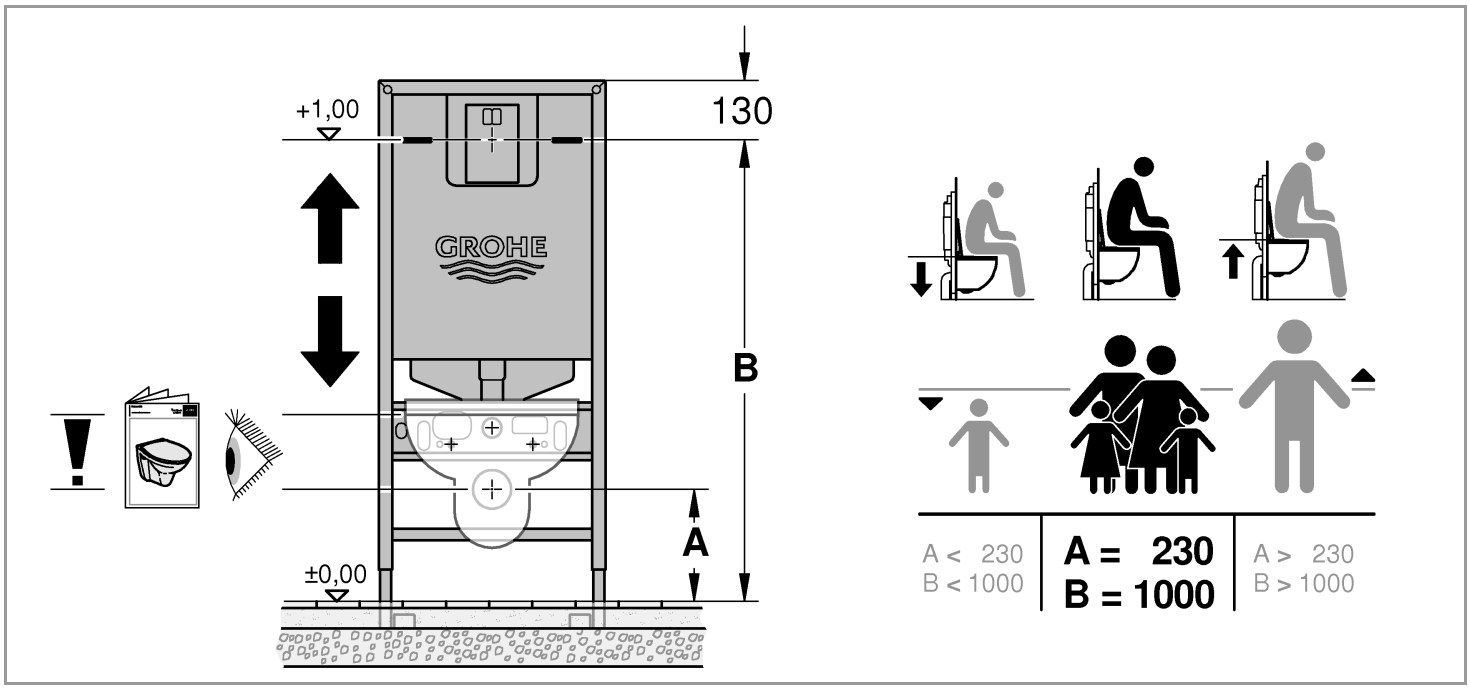

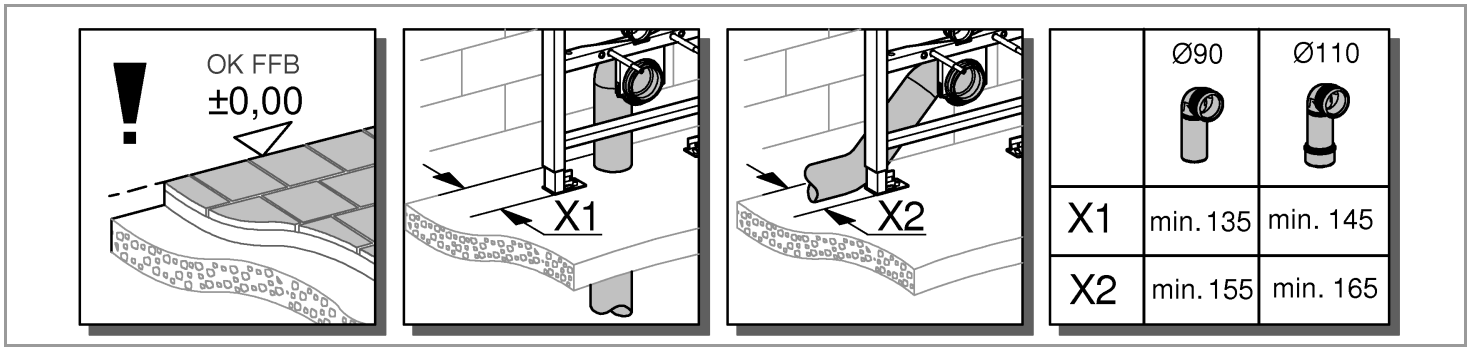

	Ø90	Ø110
X1	min. 135	min. 145
X2	min. 155	min. 165

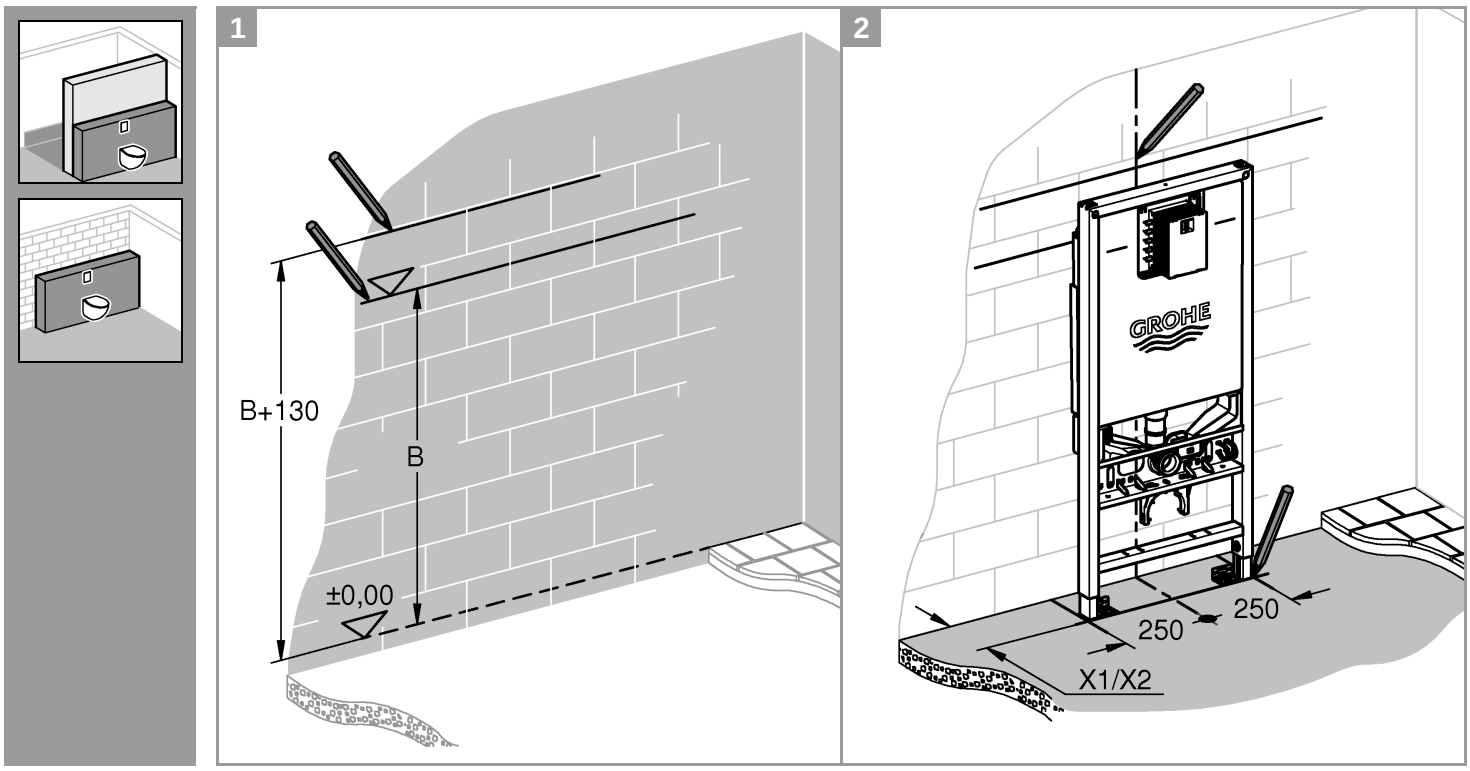

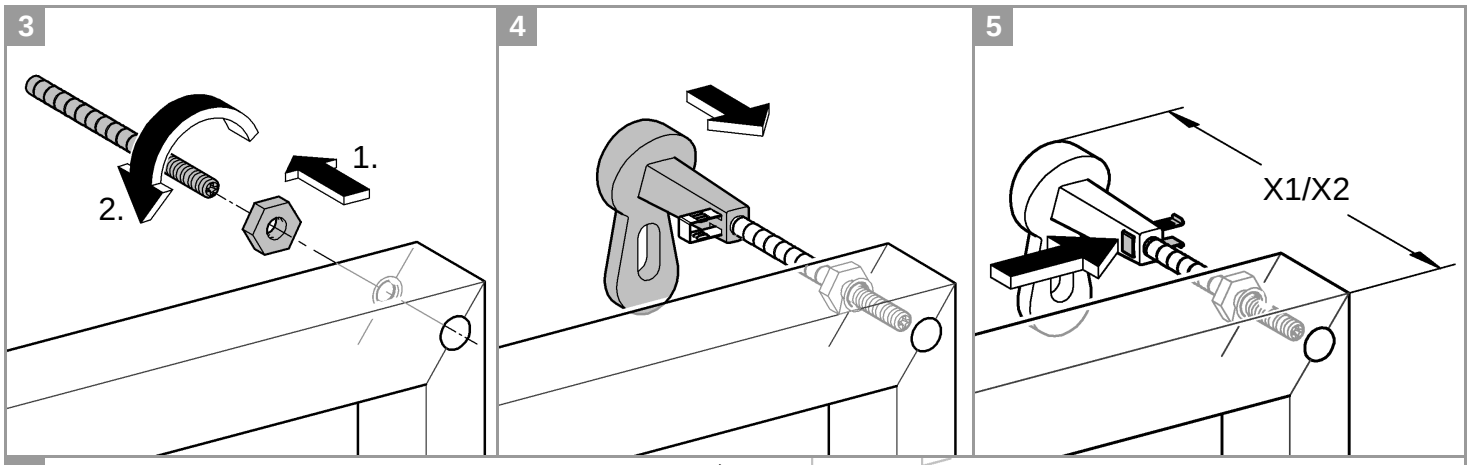
3
1.
2.
4
5
X1/X2

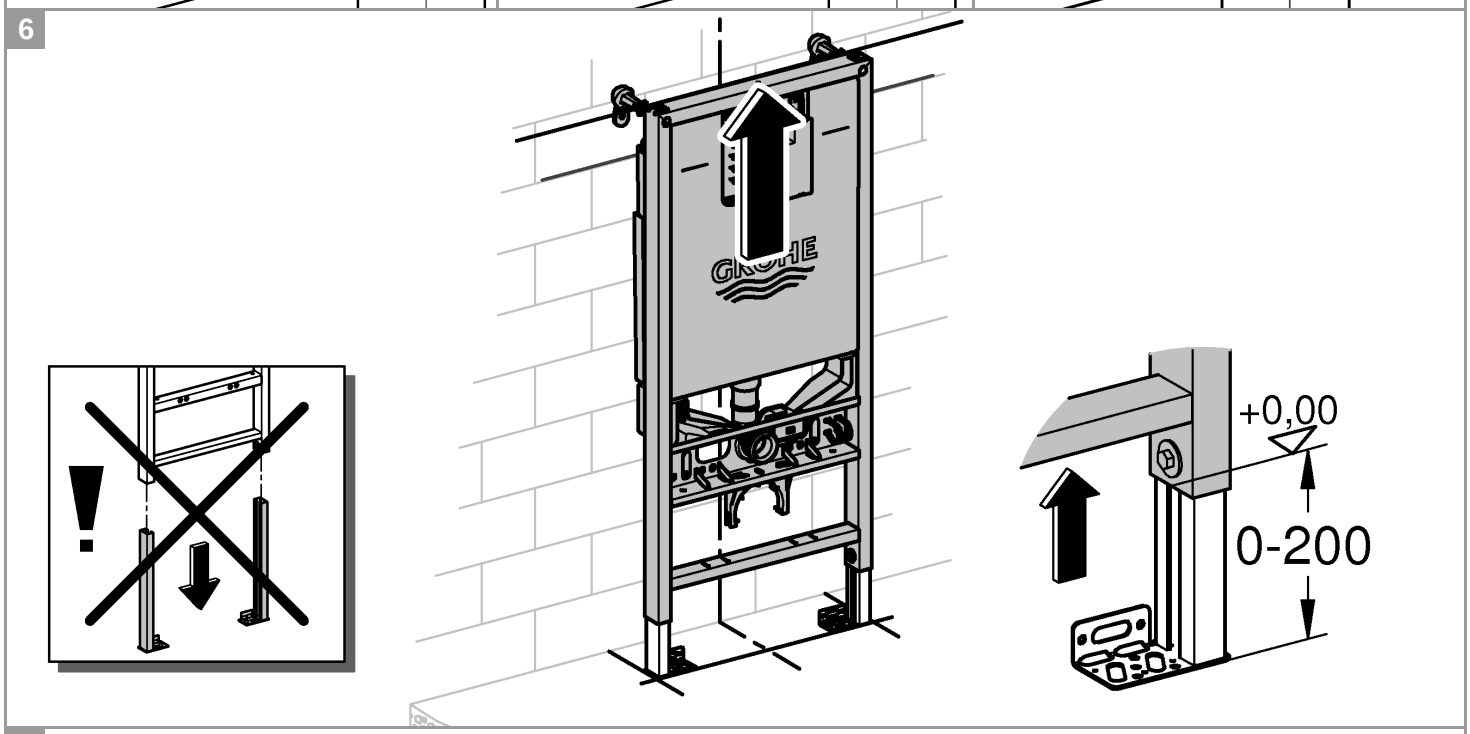
6
GROHE
+0,00
0-200

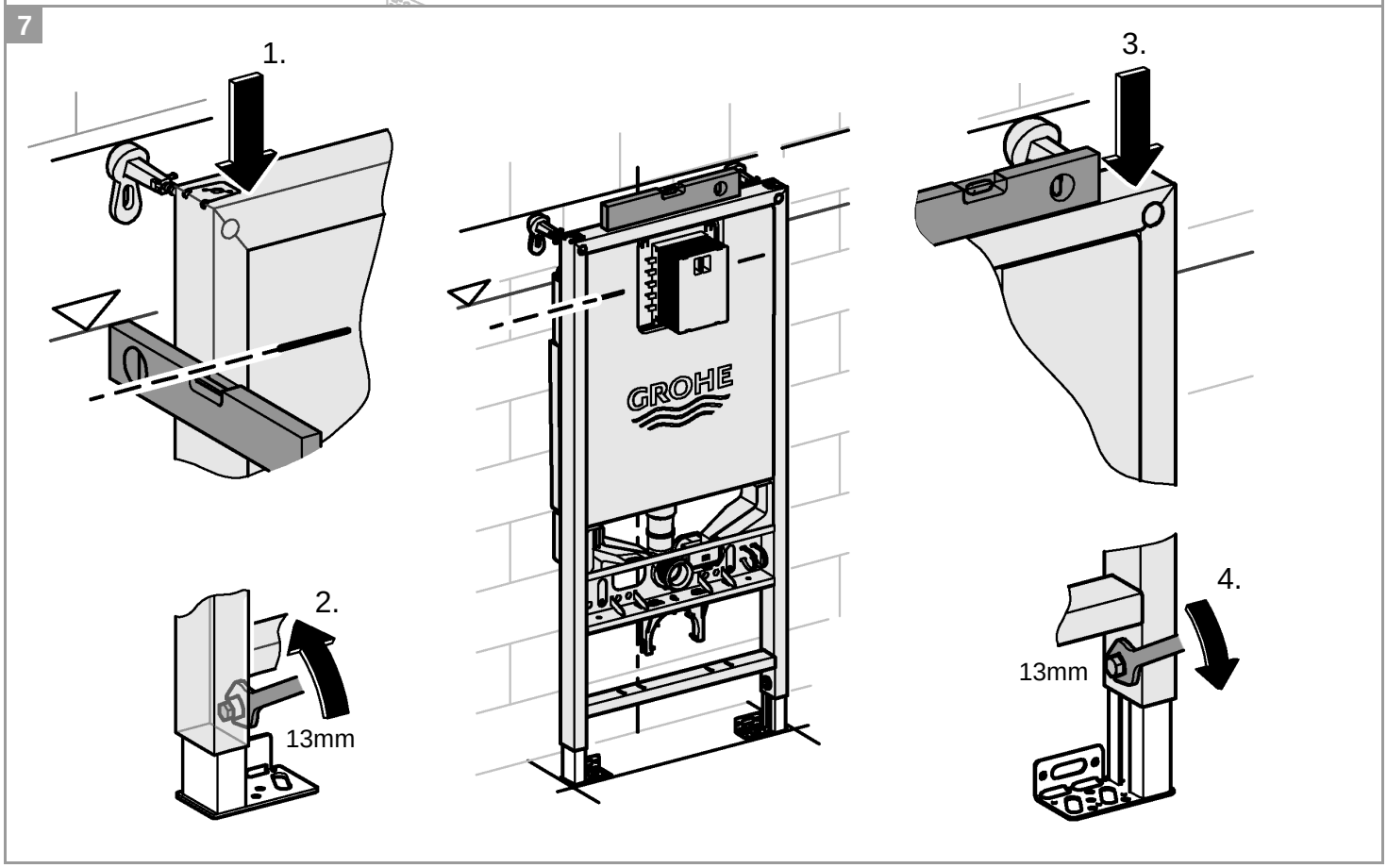
7
1.
2.
13mm
GROHE
3.
4.
13mm

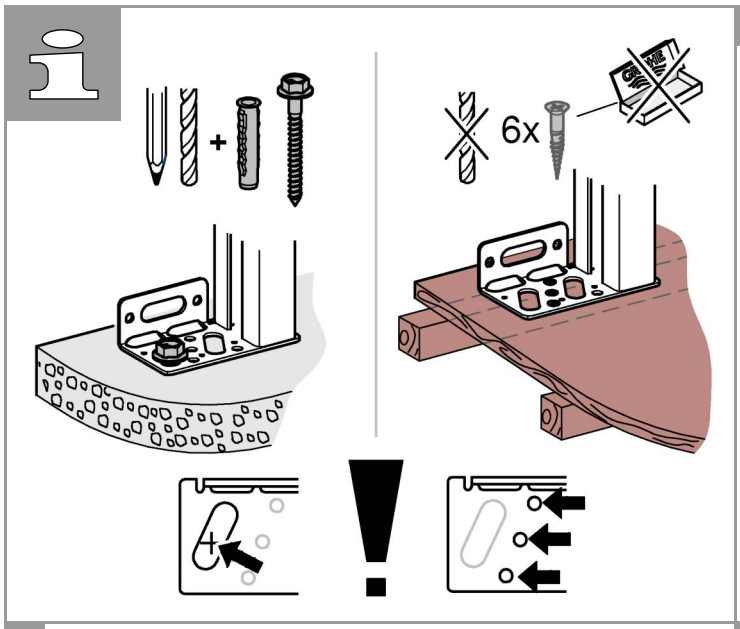

8

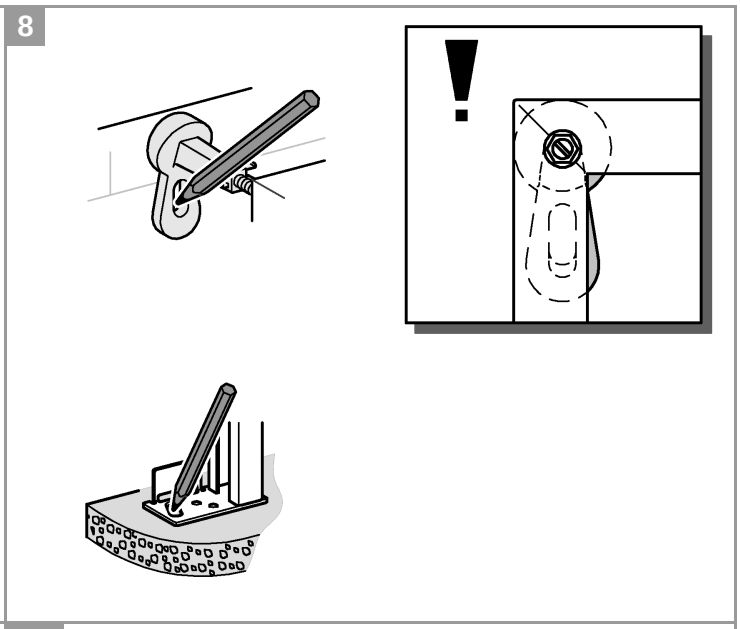

9

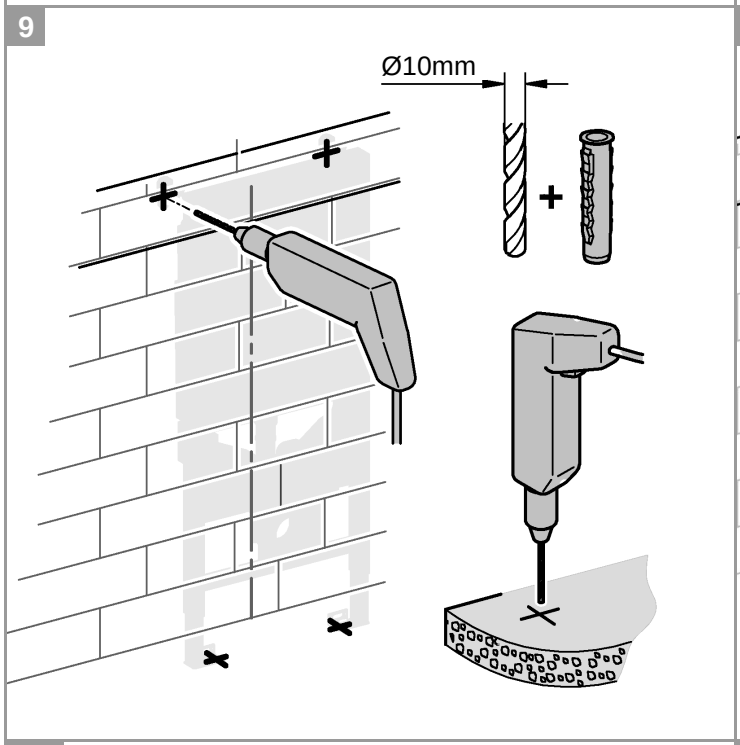

10

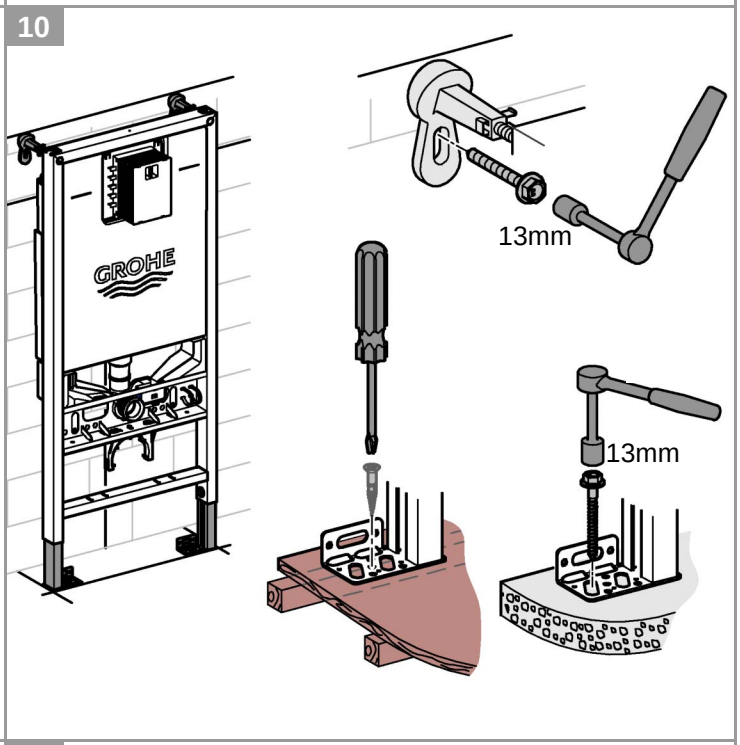

11

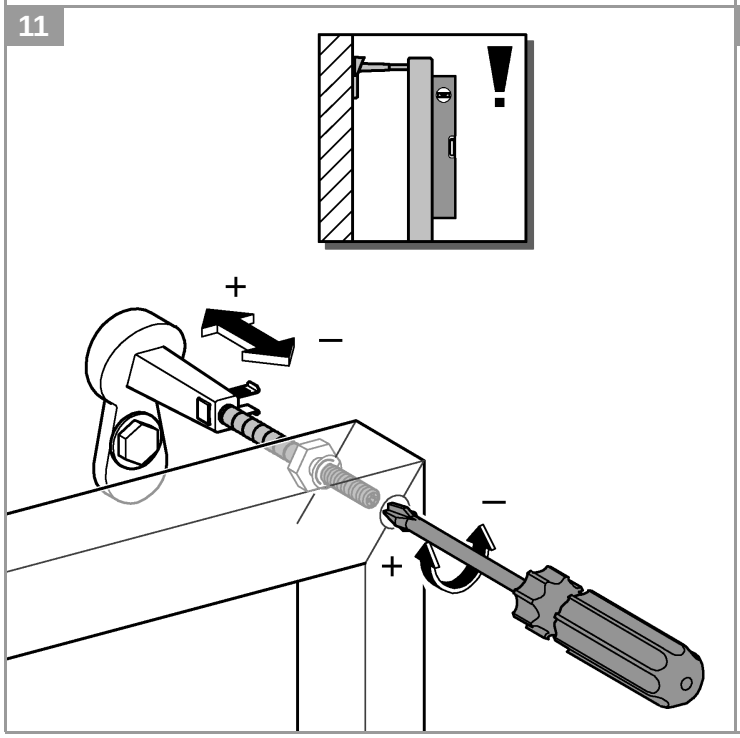

12

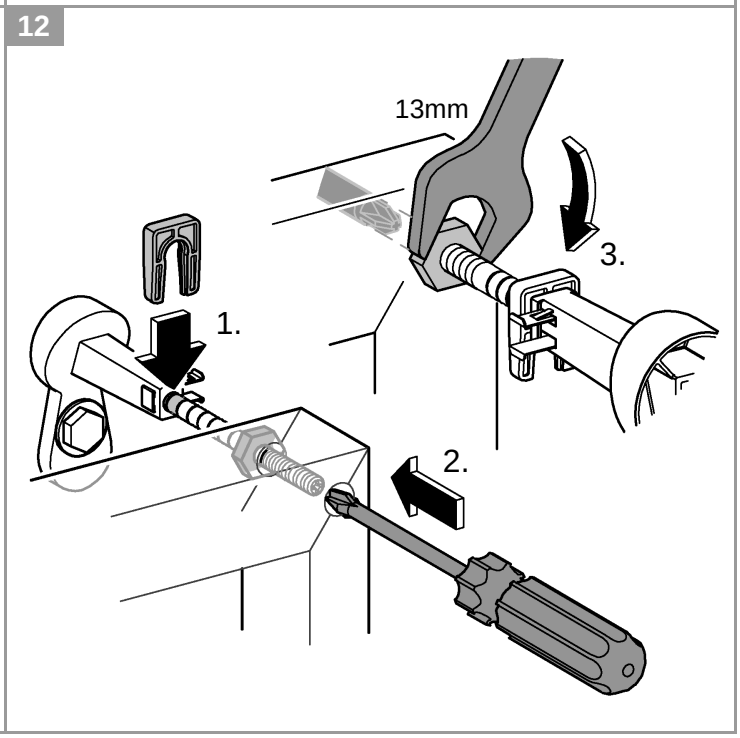

1

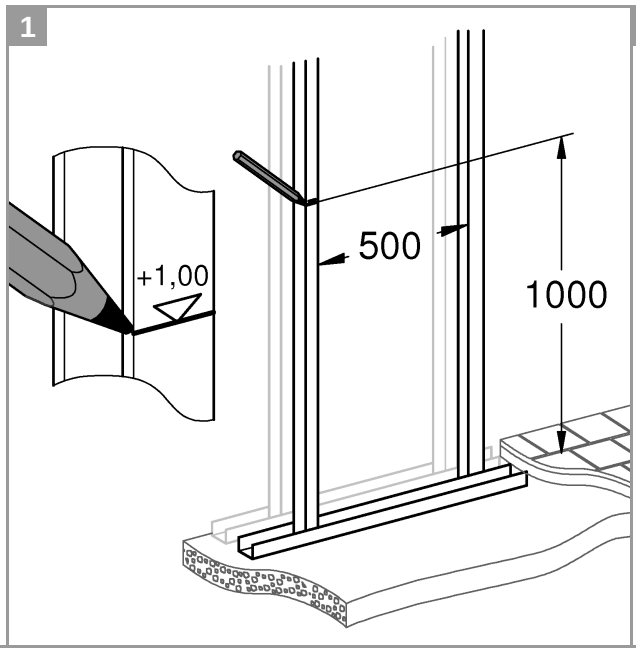

2

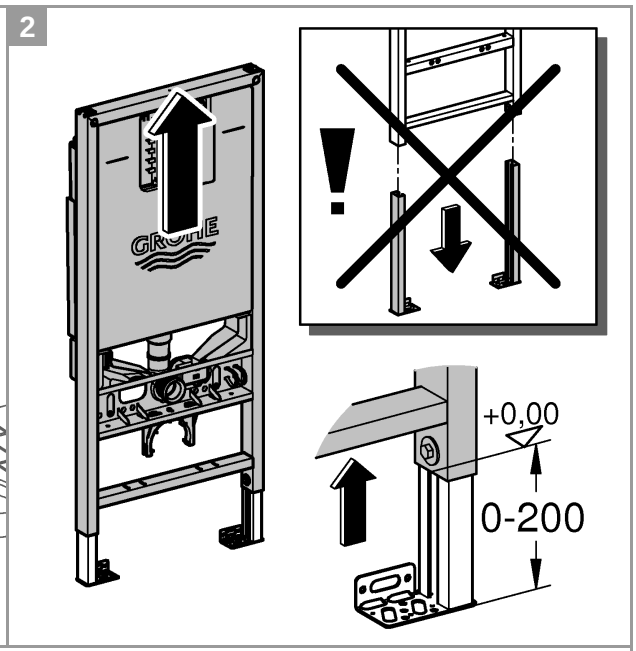

3

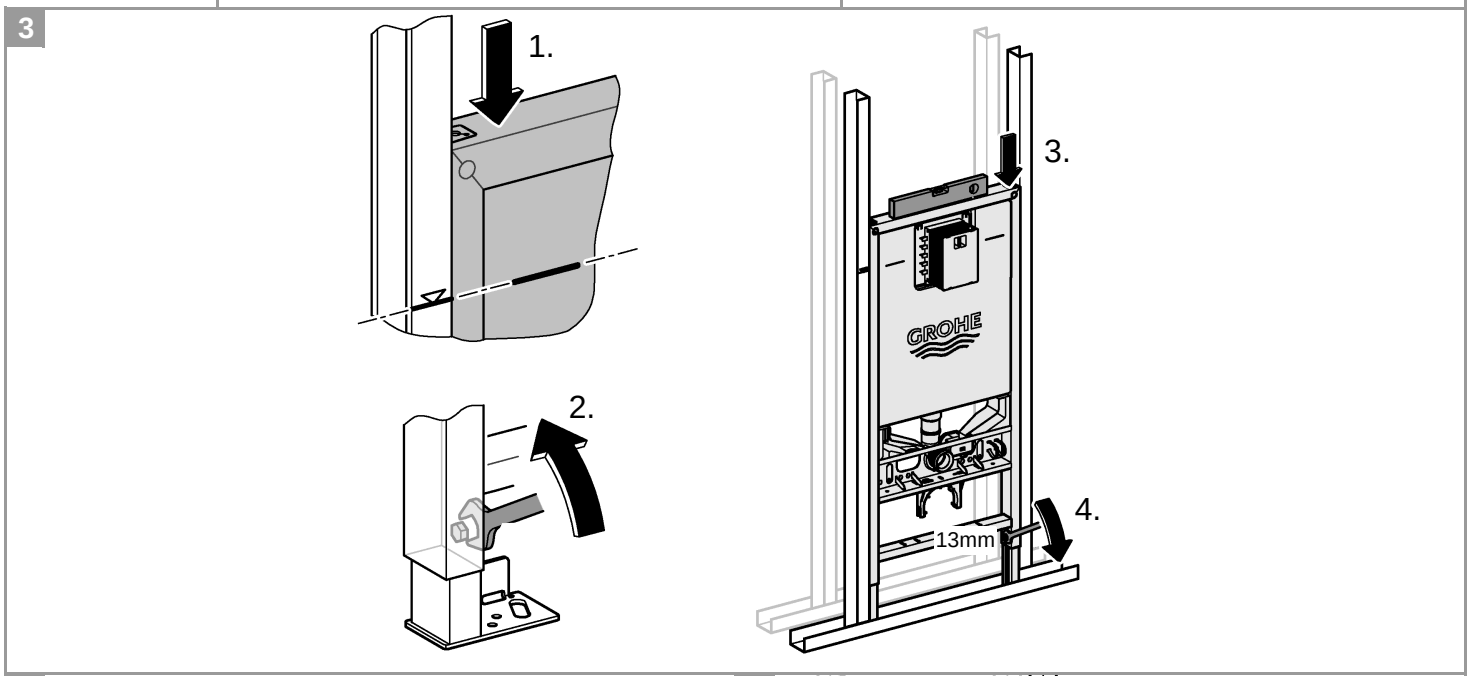

4

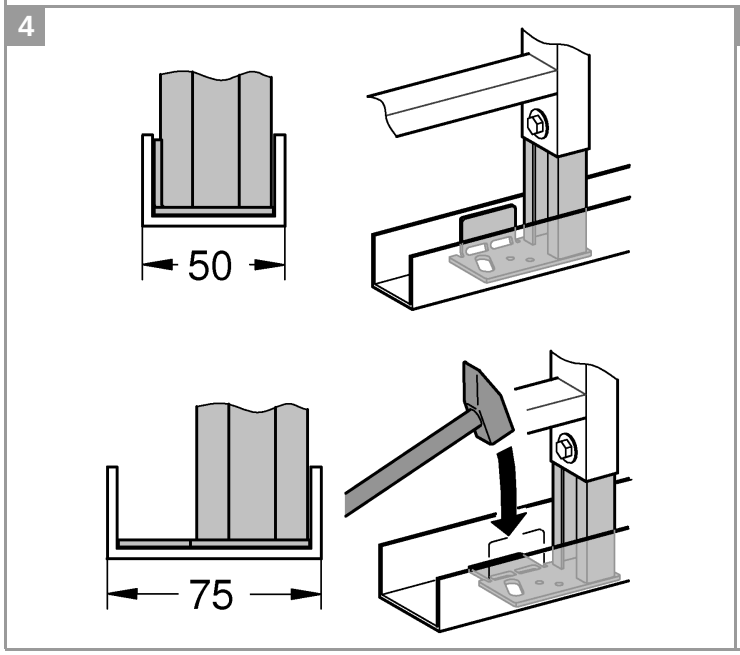

5

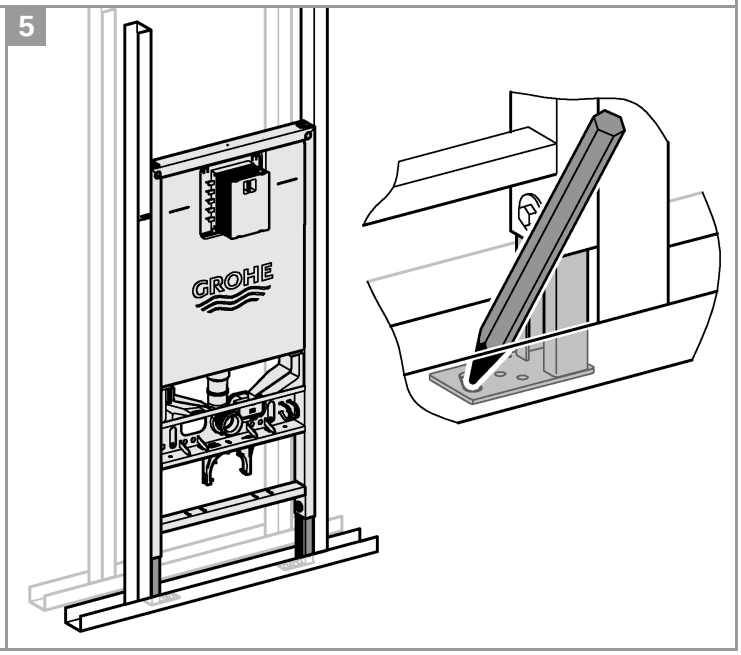

6

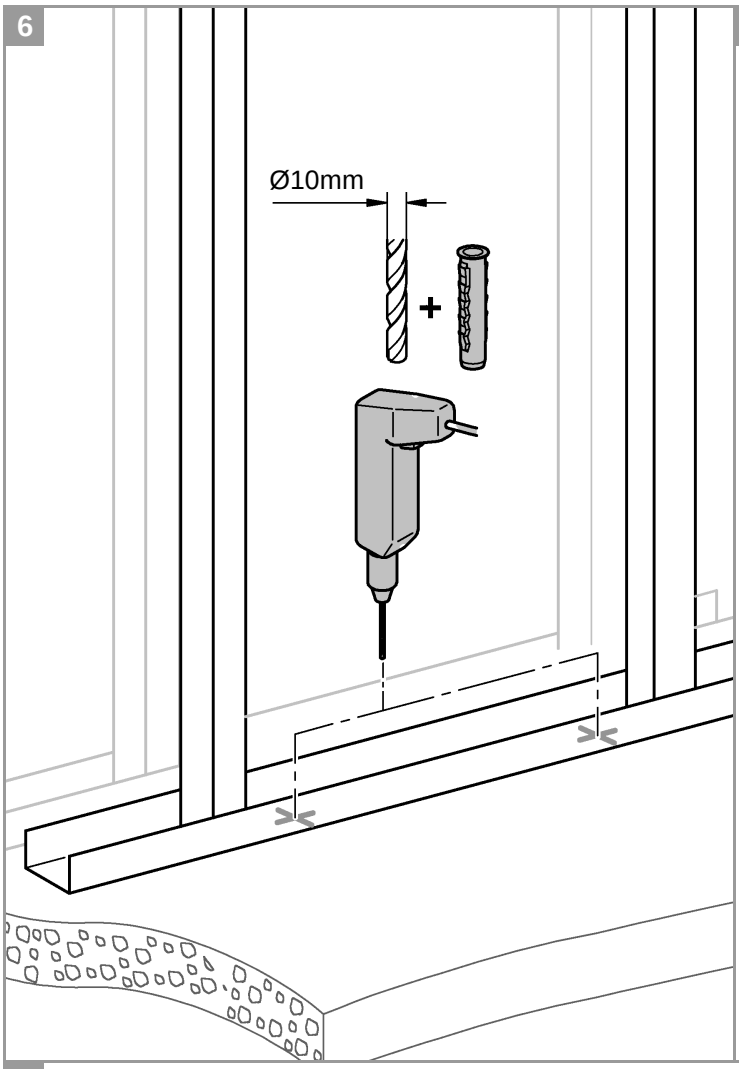

7

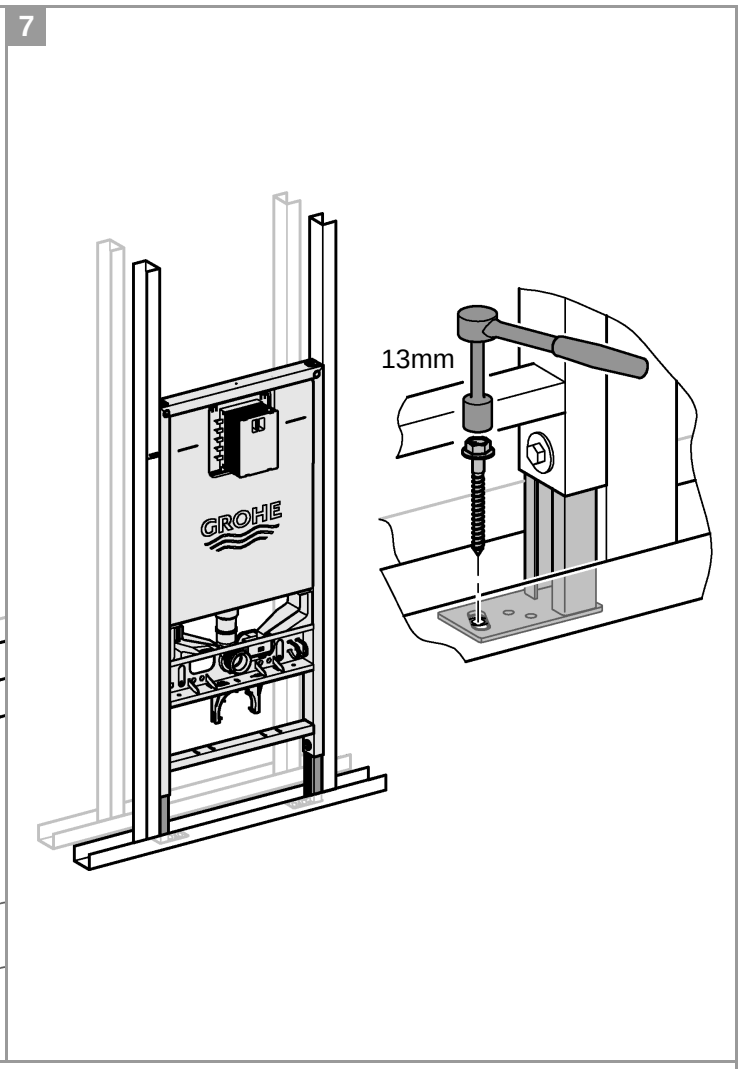

8

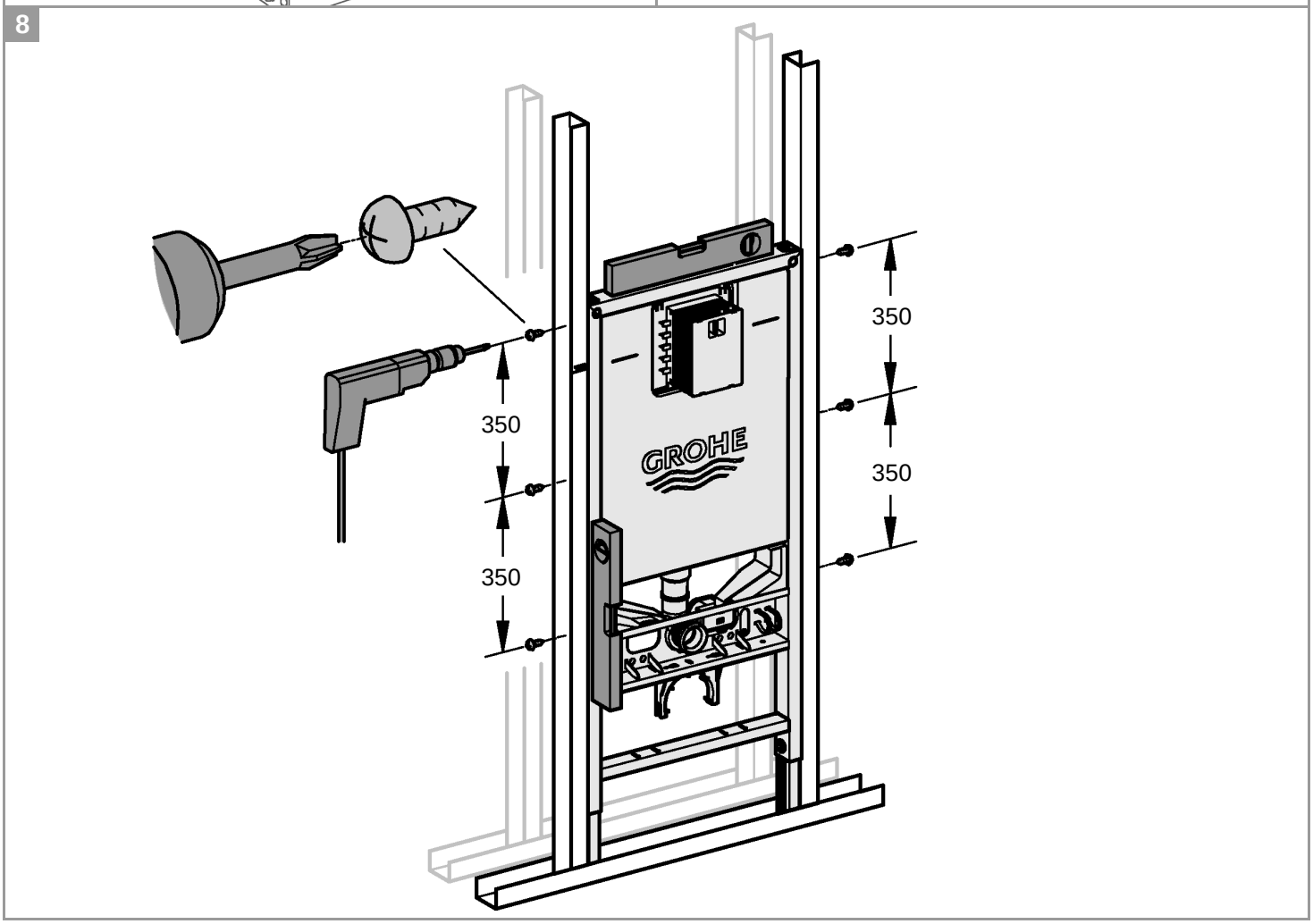

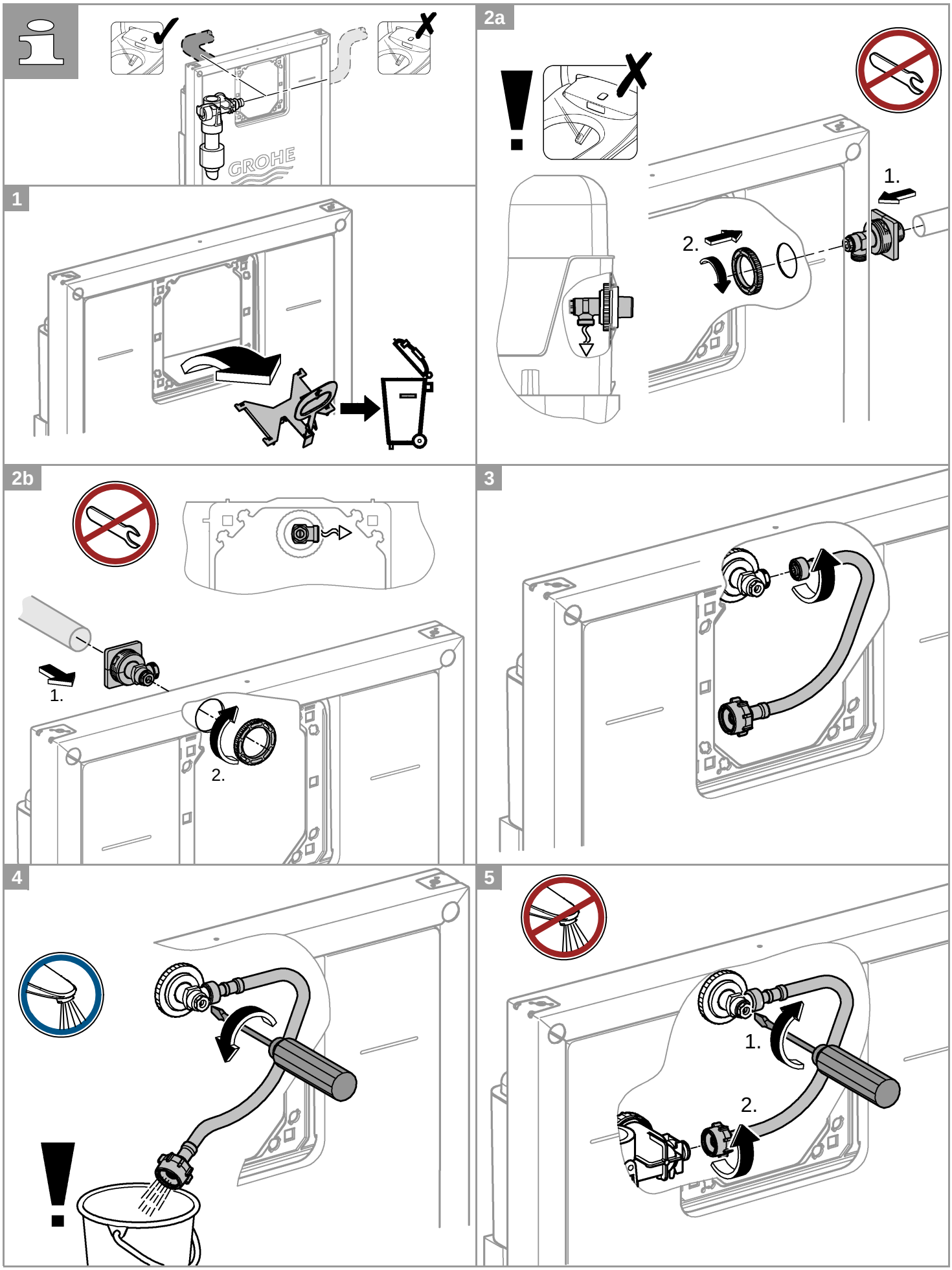
GROHE
1
2a
1.
2.
2b
1.
2.
3
4
5
1.
2.

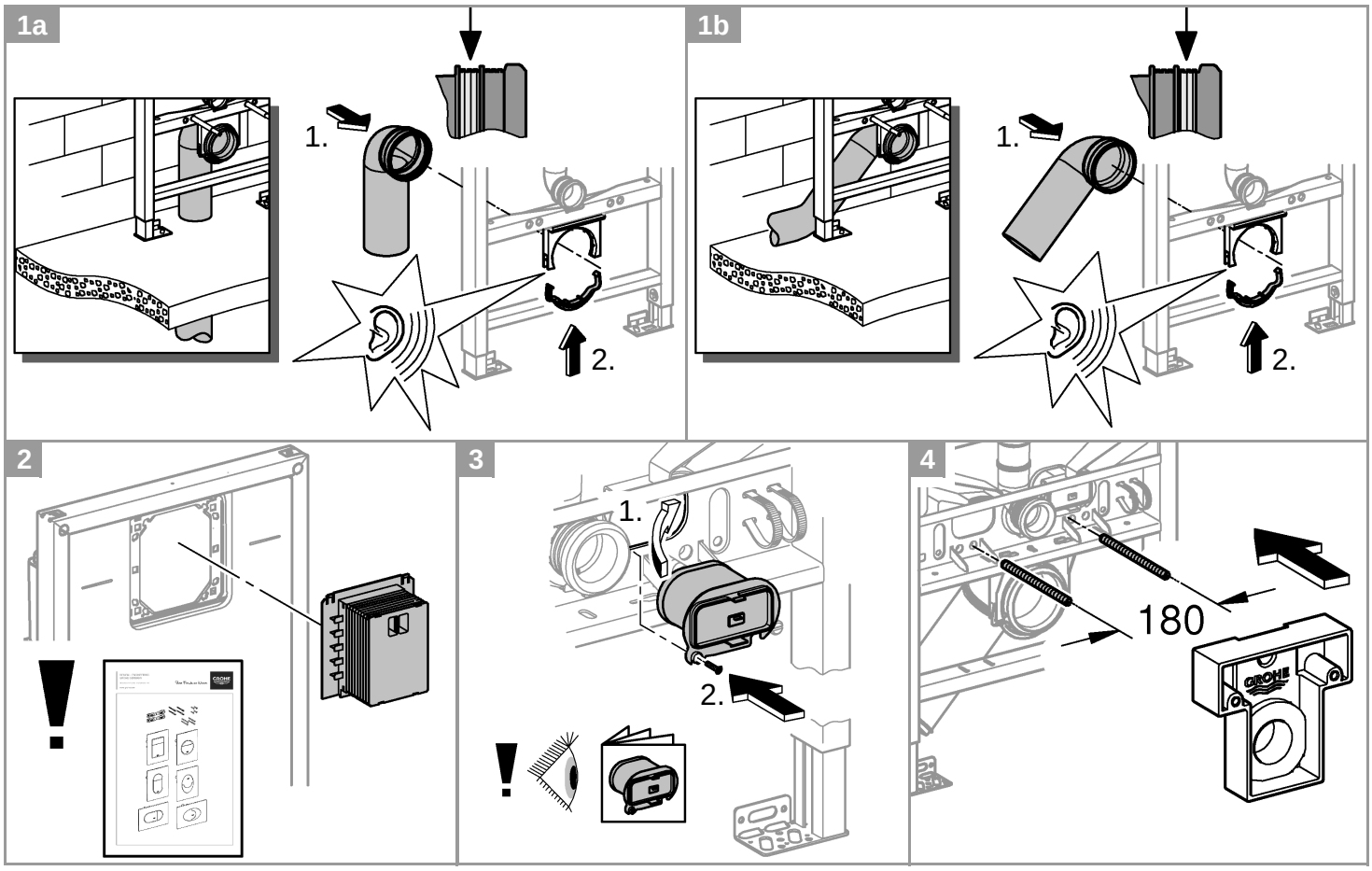
1a
1.
2.
1b
1.
2.
2
3
1.
2.
4
180

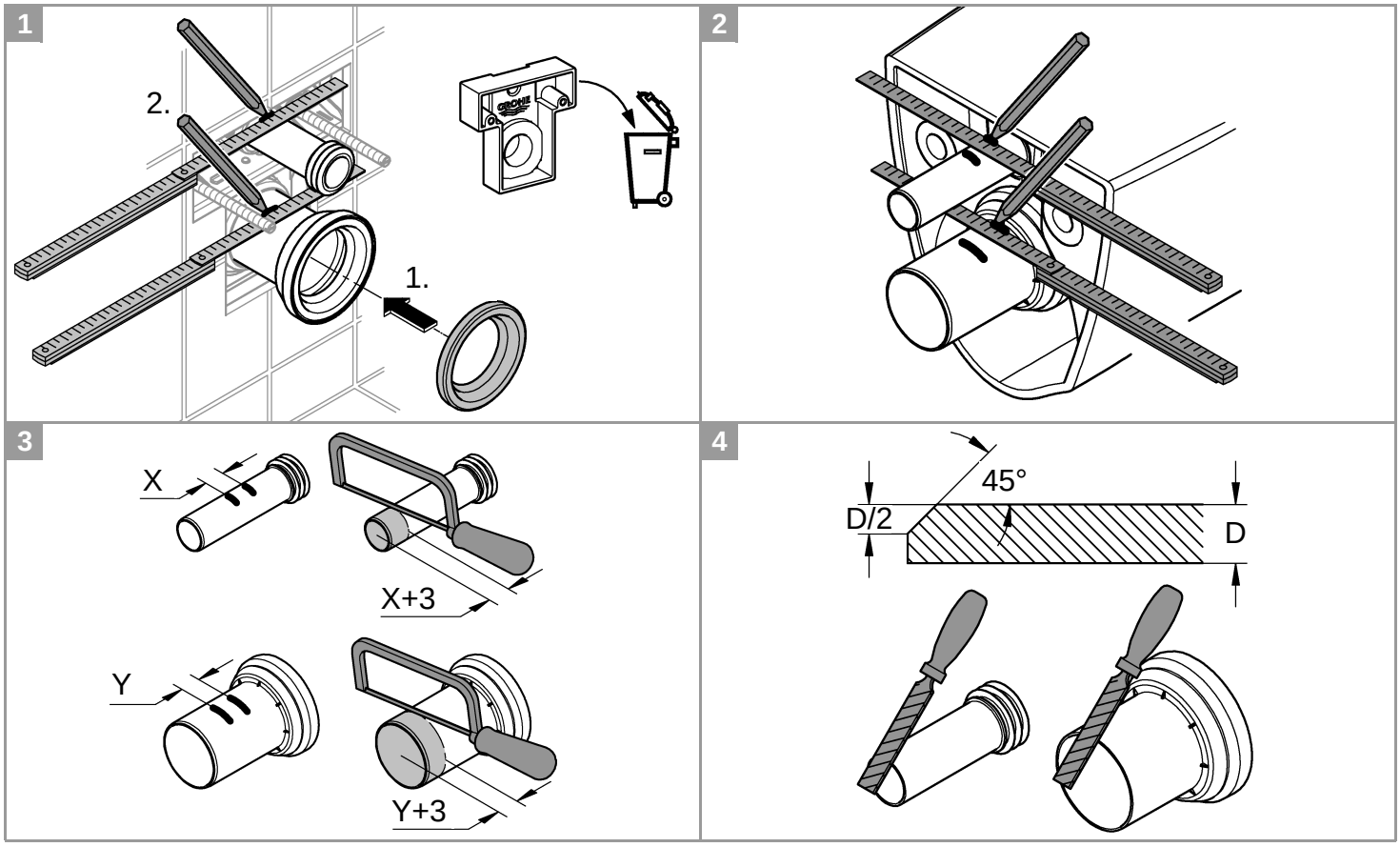
1
2.
1.
2
3
X
X+3
Y
Y+3
4
45°
D/2
D

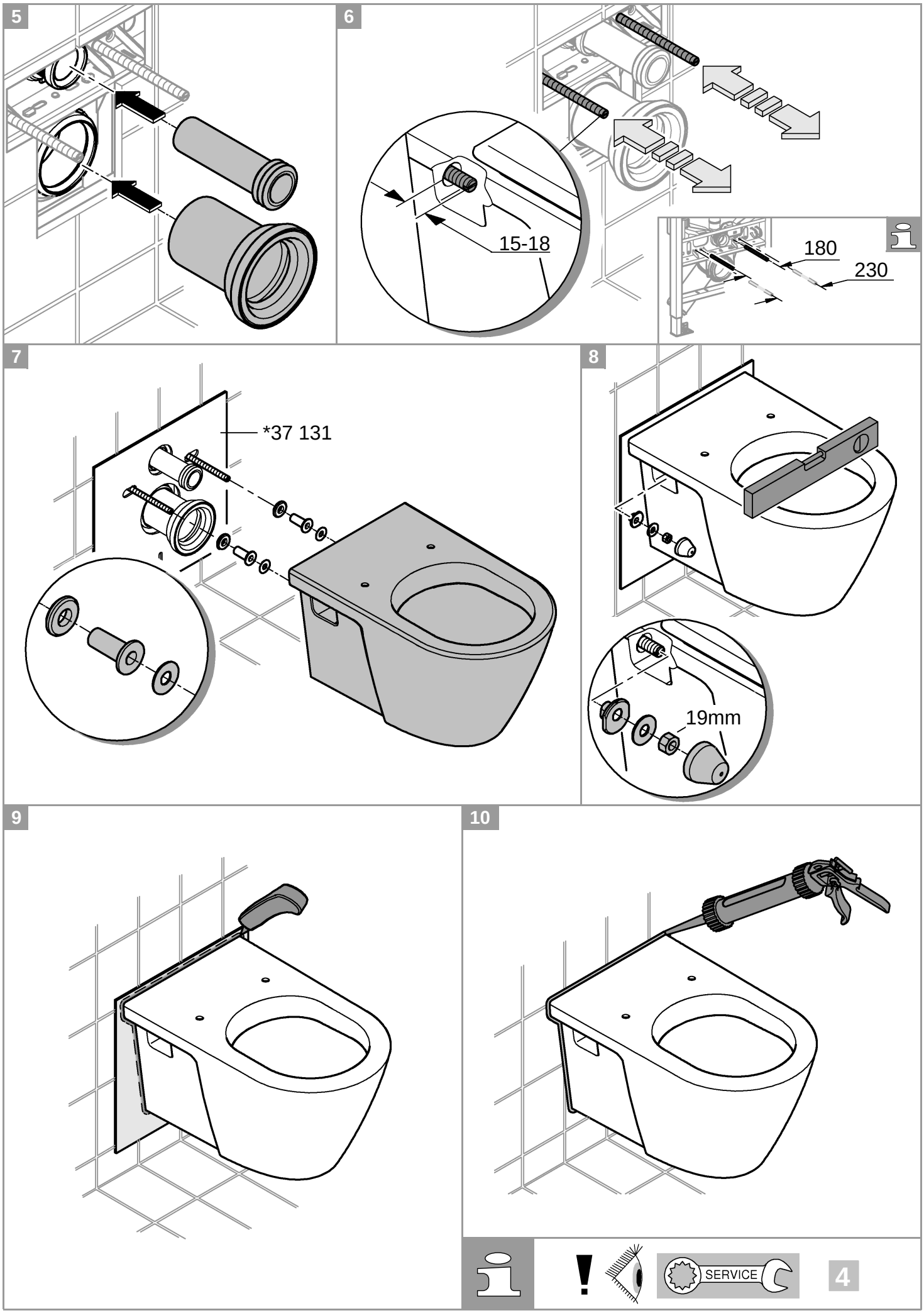
5
6
15-18
180
230
7
*37 131
8
19mm
9
10
SERVICE
4

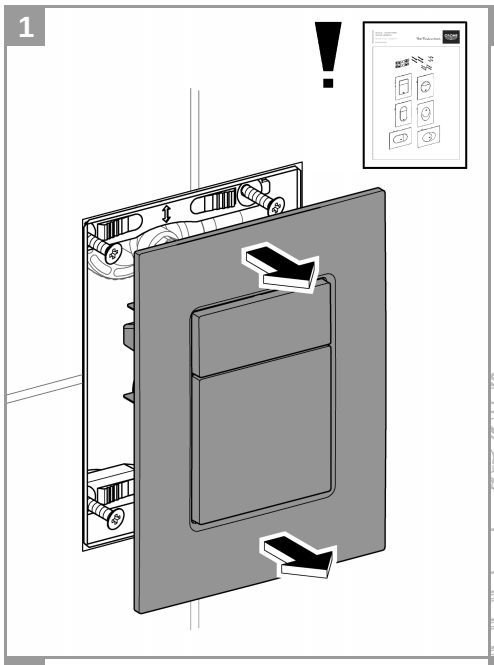
1

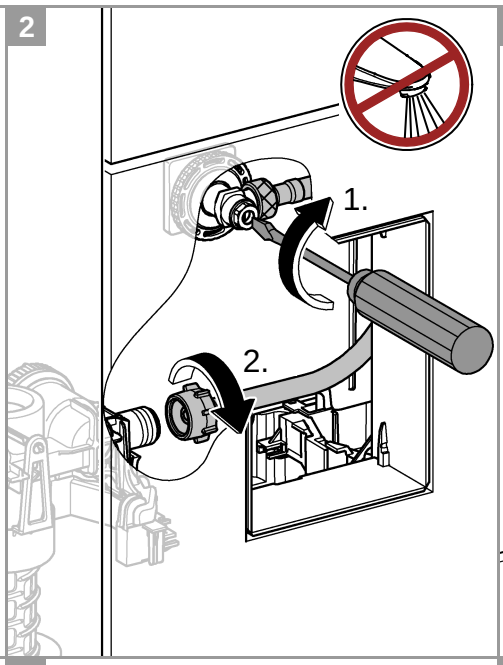
2
1.
2.

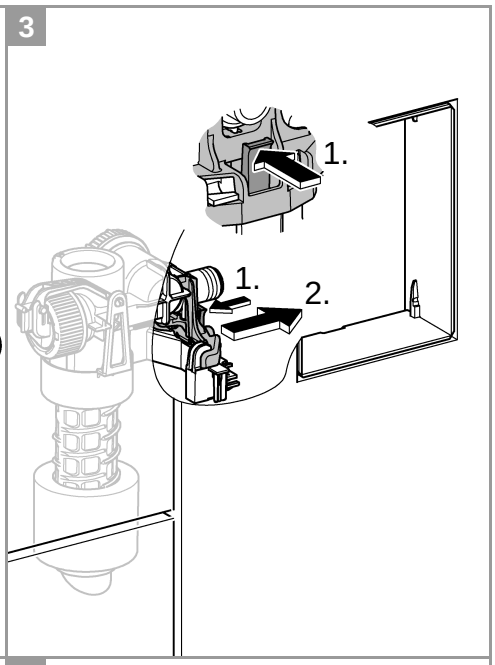
3
1.
1.
2.

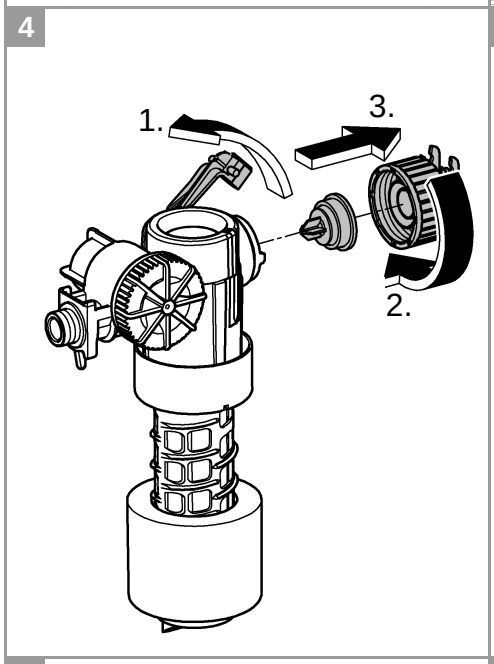
4
1.
3.
2.

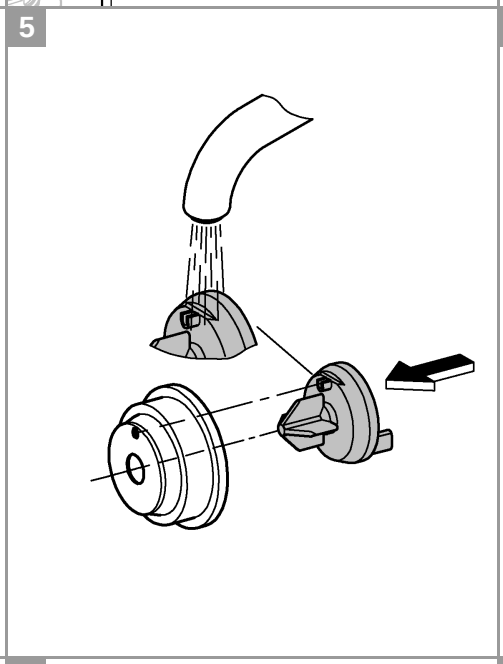
5

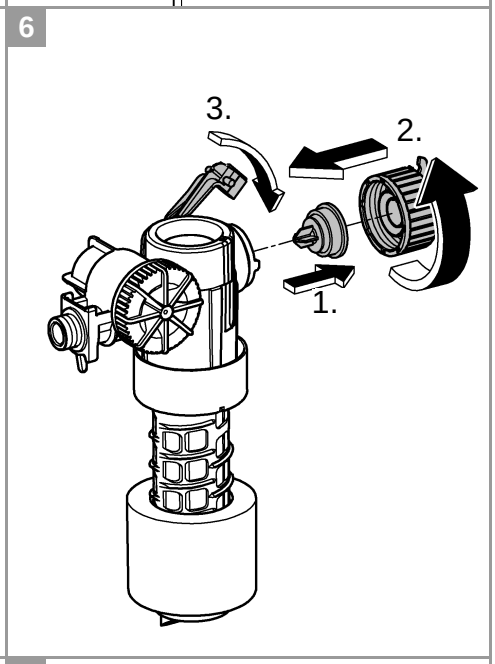
6
3.
2.
1.

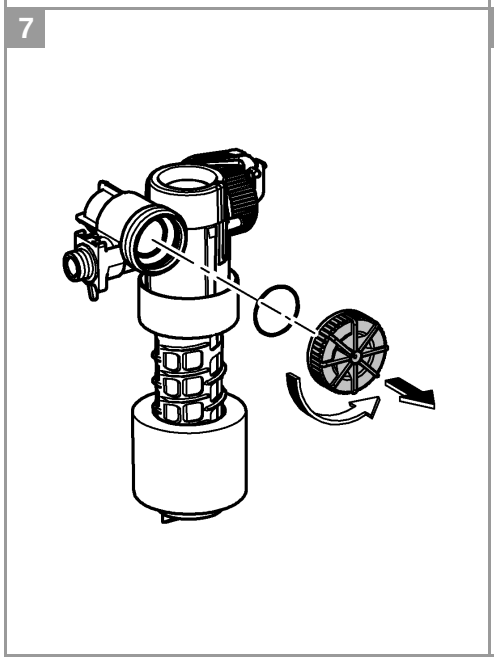
7

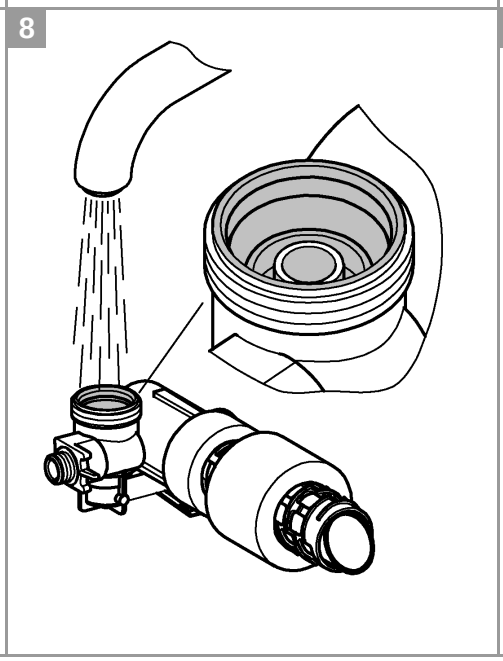
8

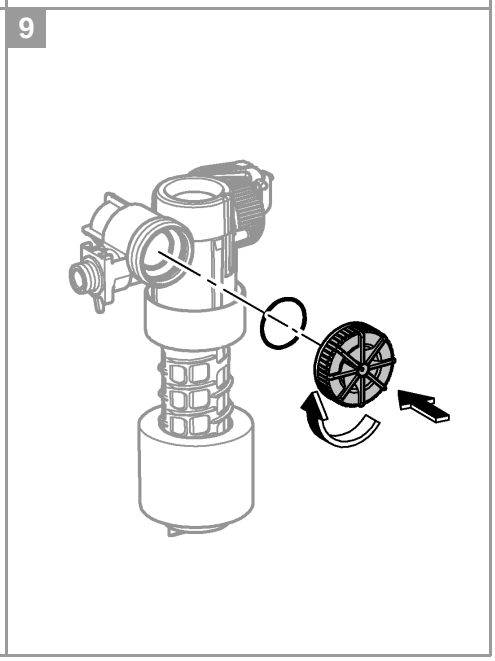
9

1

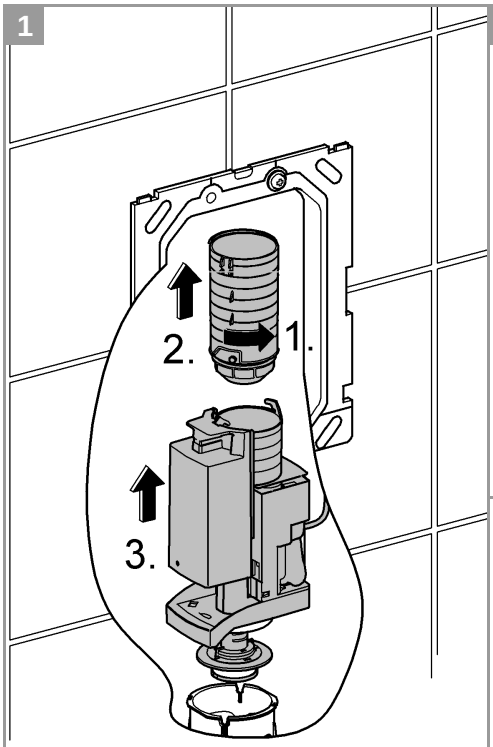

2

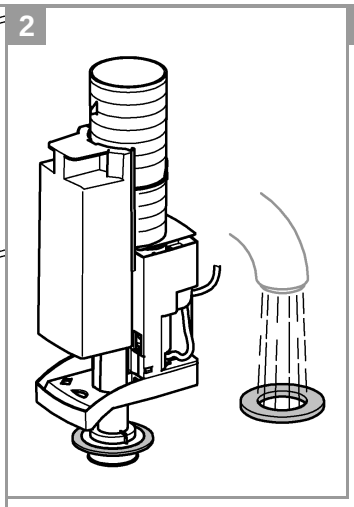

3

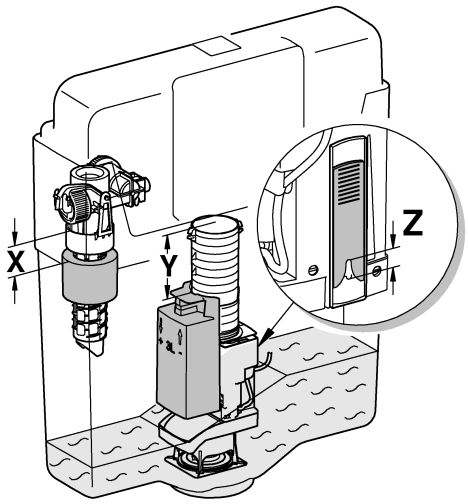

	X	Y	Z
6 l / 3 l	81mm	58mm	18mm

4

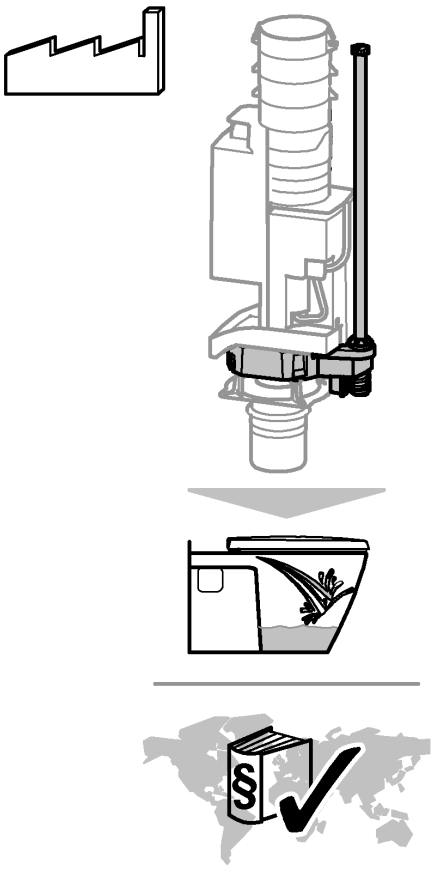

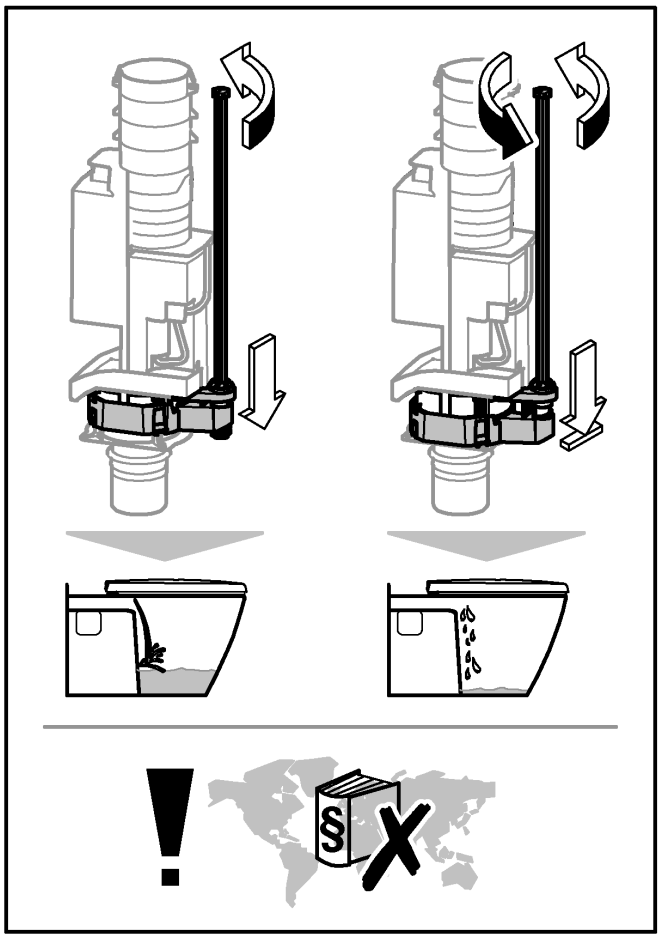

38 629

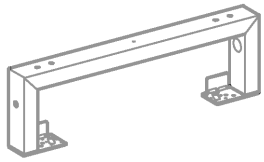

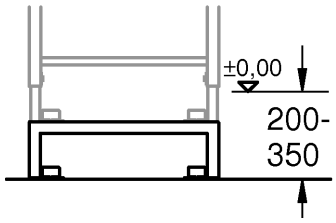

39 607

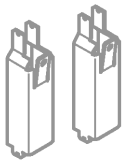

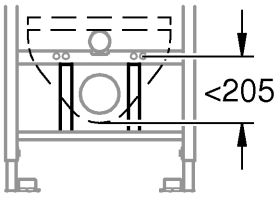

38 558

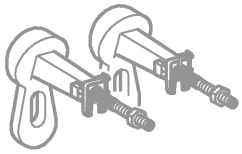

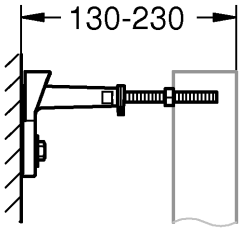

38 733

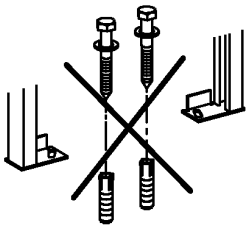

42 333

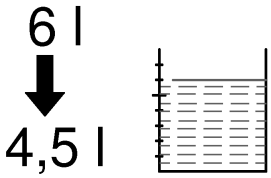

37 131

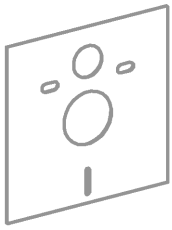

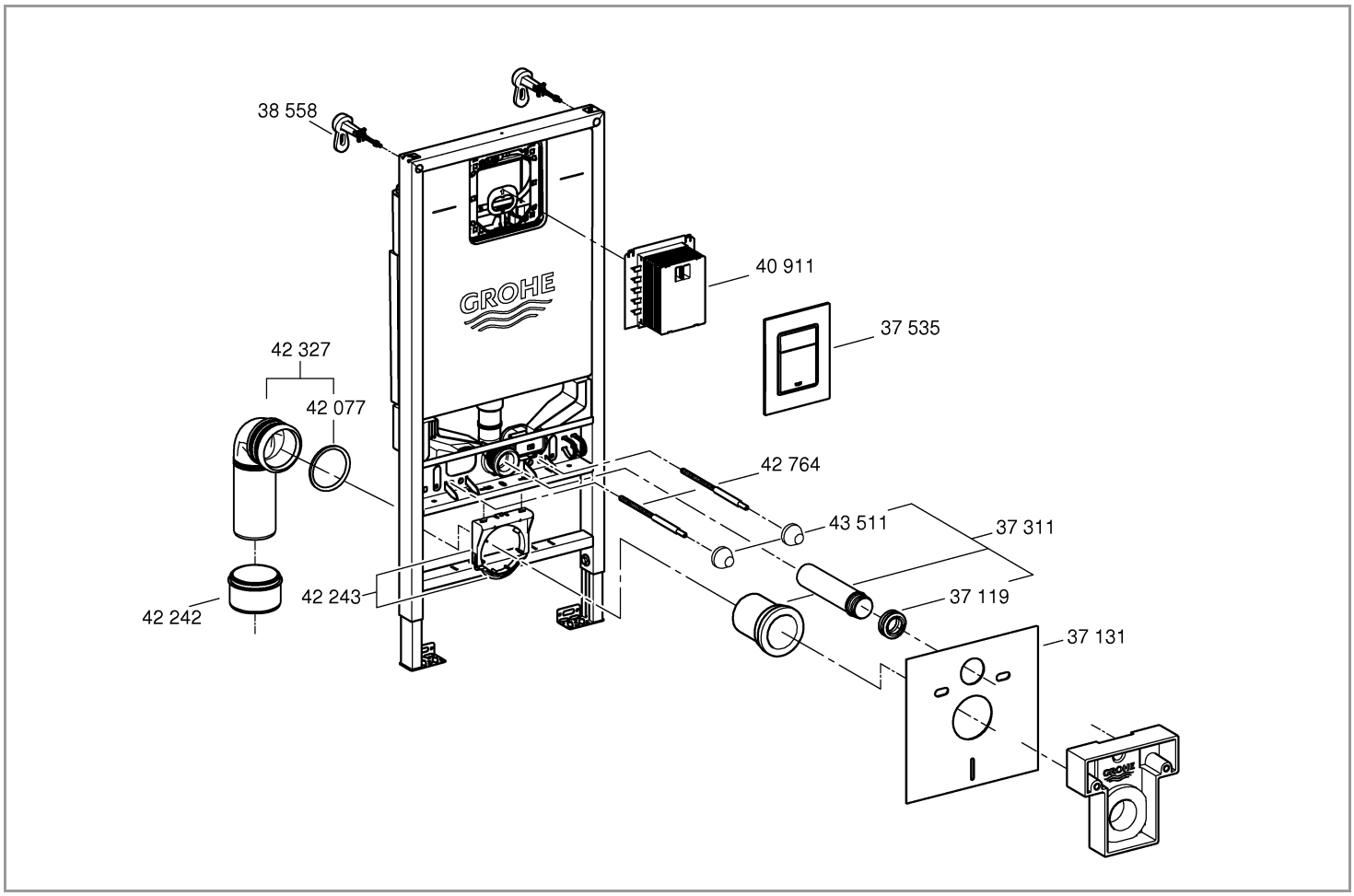
38 558
40 911
37 535
42 327
42 077
42 764
43 511
37 311
42 243
42 242
37 119
37 131

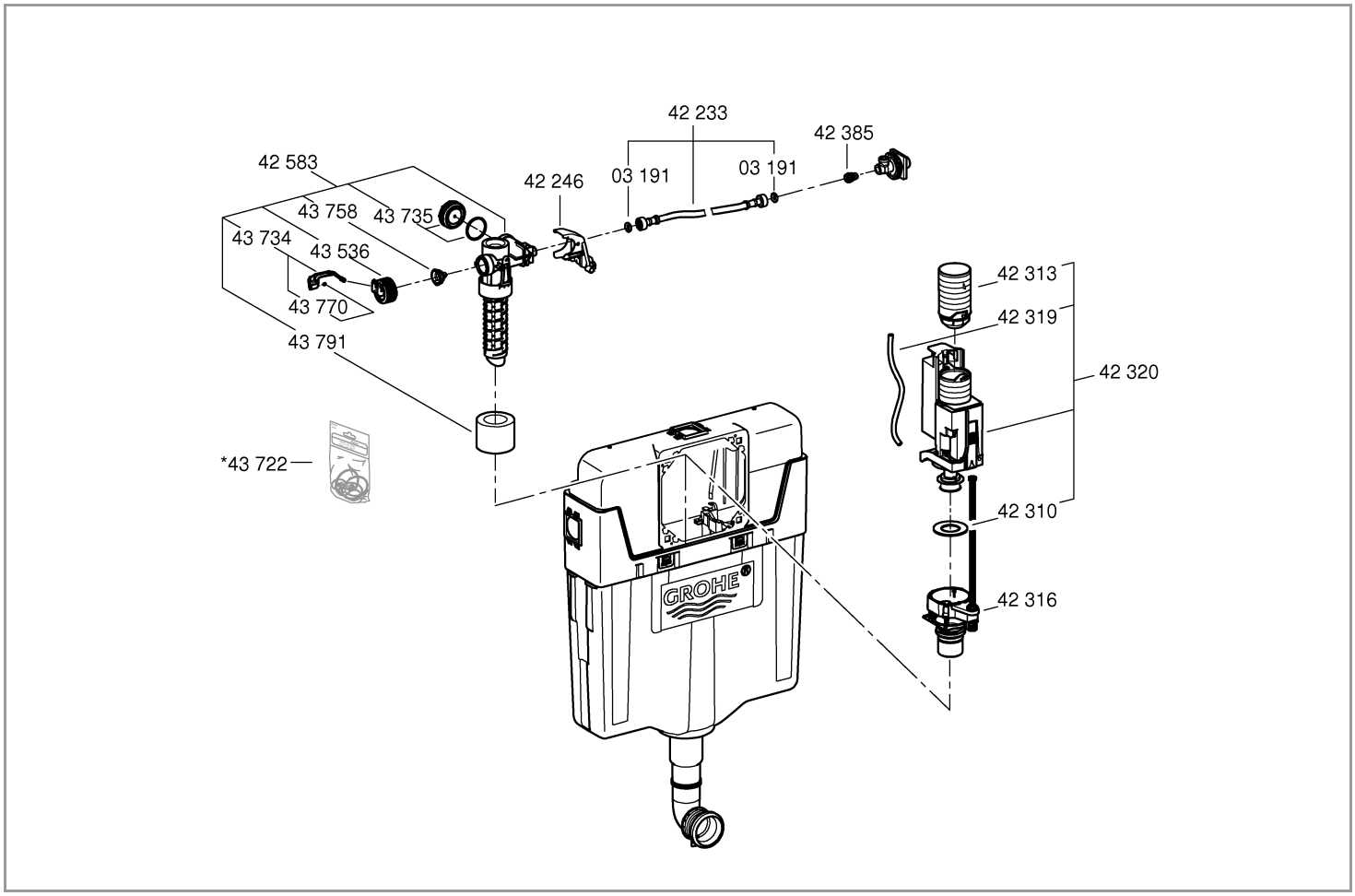
42 233
42 385
42 583
42 246
03 191
03 191
43 758
43 735
43 734
43 536
43 770
43 791
42 313
42 319
42 320
*43 722
42 310
42 316

Pure Freude an Wasser

GROHE

D
& +49 571 3989 333
helpline@grohe.de

A
& +43 1 68060
info-at@grohe.com

AUS
& +(61) 1300 54945
grohe_australia@lixil.com

B
& +32 16 230660
info.be@grohe.com

BG
& +359 2 9719959
grohe-bulgaria@grohe.com

BR
& 0800 770 1222
falecom@grohe.com

CAU
& +99 412 497 09 74
info-az@grohe.com

CDN
& +1 888 6447643
info@grohe.ca

CH
& +41 44 877 73 00
info@grohe.ch

CN
& +86 4008811698
info.cn@grohe.com

CY
& +357 22 465200
info@grome.com

CZ
& +358 942 451 390
grohe-cz@grohe.com

DK
& +45 44 656800
grohe@grohe.fi

E
& +34 93 3368850
grohe@grohe.es

EST
& +372 6616354
grohe@grohe.ee

F
& +33 1 49972900
sav-fr@grohe.com

FIN
& +358 942 451 390
grohe@grohe.fi

GB
& +44 871 200 3414
info-uk@grohe.com

GR
& +30 210 2712908
nsapountzis@ath.forthnet.gr

H
& +36 1 2388045
info-hu@grohe.com

HK
& +852 2969 7067
info@grohe.hk

I
& +39 2 959401
info-it@grohe.com

IND
& +91 1800 102 4475
customercare.in@grohe.com

IS
& +354 515 4000
jonst@byko.is

J
& +81 3 32989730
info@grohe.co.jp

KZ
& +7 727 311 07 39
info-cac@grohe.com

LT
& +372 6616354
grohe@grohe.ee

LV
& +372 6616354
grohe@grohe.ee

MAL
info-malaysia@grohe.com

MX
& 01800 8391200
pregunta@grohe.com

N
& +47 22 072070
grohe@grohe.no

NL
& +31 79 3680133
vragen-nl@grohe.com

NZ
technicalenquiries@
patersontrading.co.nz

P
& +351 234 529620
commercial-pt@grohe.com

PL
& +48 22 5432640
biuro@grohe.com.pl

RI
& 0-800-1-046743
customercare-
indonesia@asia.lixil.com

RO
& +40 21 2125050
info-ro@grohe.com

ROK
& +82 2 1588 5903
info-singapore@grohe.com

RP
& +63 2 8938681

RUS
& +7 495 9819510
info@grohe.ru

S
& +46 771 141314
grohe@grohe.se

SGP
& +65 6311 3611
info-singapore@grohe.com

SK
& +420 277 004 190
grohe-cz@grohe.com

T
& +66 21681368
(Haco Group)
info@haco.co.th

TR
& +90 216 441 23 70
GroheTurkey@grome.com

UA
& +38 44 5375273
info-ua@grohe.com

USA
& +1 800 4447643
us-customerservice@grohe.com

VN
& +84 90 9694768
& +84 90 9375068
info-vietnam@grohe.com

AL BiH HR KS ME MK SLO SRB
& +385 1 2911470
adria-hr@grohe.com

Eastern Mediterranean, Middle East - Africa Area Sales Office:
& +357 22 465200
info@grome.com

IR OM UAE YEM
& +971 4 3318070
grohedubai@grome.com

Far East Area Sales Office:
& +65 6311 3600
info@grohe.com.sg

Latin America:
& +52 818 3050626
pregunta@grohe.com

www.grohe.com

2016/09/28